Course "**Fundamentals of Artificial Intelligence**" EXAM TEXT

Prof. Roberto Sebastiani
DISI, Università di Trento, Italy

2026.09.08

6305186

Name : NAME

Surname: SURNAME

Matriculation Number: 000000

1

Let

- $h(n)$ be a heuristic function representing the estimated cost from a node n to the solution,
- $h^*(n)$ represent the true cost from a node n to the solution,
- $c(n, a, n')$ represent the cost of passing from node n top node n' via action a.

For each of the following facts about heuristic search and A^*, say if it is true or false.

(a) $h(n)$ is admissible if and only if $h(n) \leq c(n, a, n') + h(n')$ for every successor n' of n generated by any action a

(b) $h(n)$ is consistent (aka monotonic) if and only if $h(n) = h^*(n)$.

(c) if $h(n)$ is admissible, then A^* tree search is optimal

(d) if $h(n)$ is consistent (aka monotonic), A^* tree graph is optimal

[SCORING [0...100]:

- +25pts for each correct answer
- -25pts for each incorrect answer
- 0pts for each unanswered question

]

2

Consider propositional logic (PL); let A, B, C, D, E, F, G be atomic propositions.
For each of the following statements, say if it is true or false.

(*a*) $((A \wedge B) \rightarrow C)$ is equivalent to $(A \rightarrow (B \rightarrow C))$

(*b*) $((A \wedge B) \rightarrow C$ is equivalent to $(A \rightarrow C) \wedge (B \rightarrow C))$

(*c*) $((A \leftrightarrow B) \leftrightarrow C)$ is valid if and only if $(\neg A \leftrightarrow (\neg B \leftrightarrow \neg C))$ is unsatisfiable

(*d*) $((A \leftrightarrow B) \leftrightarrow C)$ is satisfiable if and only if $(\neg A \leftrightarrow (\neg B \leftrightarrow \neg C))$ is unsatisfiable

[SCORING [0...100]:

- +25pts for each correct answer
- -25pts for each incorrect answer
- 0pts for each unanswered question

]

3

In the following FOL formulas, let P, Q, R, and $>, \leq, <, \geq$ denote predicates,
f, g, h, F_1, F_2, F_3 and $+, -, \cdot, /$ denote functions,
x, y, z, x_1, x_2, x_3 denote variables,
A, B, C, C_1, C_2, C_3 and $0, 1, 2, 3, 4$ denote constants.
For each of the following facts, say if it is true or false.

(a) The FOL formula $\forall x.((x < 1) \wedge (x > 2))$ is unsatisfiable.

(b) The FOL formula $(2 < 4)$ is valid.

(c) The FOL formula $(\exists x_1 \forall x_2.P(x_1, x_2)) \rightarrow (\forall x_2 \exists x_1.P(x_1, x_2))$ is valid.

(d) The FOL formula $(\neg \exists x_1.\neg P(x_1)) \leftrightarrow (\forall x_1.P(x_1))$ is valid

[SCORING [0...100]:

- +25pts for each correct answer
- -25pts for each incorrect answer
- 0pts for each unanswered question

]

4

Consider (normal) modal logics. Let $\mathsf{IsOn(Light)}, \mathsf{IsRunning(Pump)}$ be possible facts, let $Ada, Chris$ be agents and let $\mathbf{K}_{Ada}, \mathbf{K}_{Chris}$ denote the modal operators "Ada knows that..." and "Chris knows that..." respectively.
For each of the following facts, say if it is true or false.

(*a*) If $\neg\mathbf{K}_{Ada}(\mathsf{IsOn(Light)} \wedge \mathsf{IsRunning(Pump)})$ holds, then $\neg\mathbf{K}_{Ada}\mathsf{IsOn(Light)} \wedge \neg\mathbf{K}_{\mathsf{Ada}}\mathsf{IsRunning(Pump)}$ holds

(*b*) If $\neg\mathbf{K}_{Ada}\mathsf{IsOn(Light)} \wedge \neg\mathbf{K}_{\mathsf{Ada}}\mathsf{IsRunning(Pump)}$ holds, then $\neg\mathbf{K}_{Ada}(\mathsf{IsOn(Light)} \wedge \mathsf{IsRunning(Pump)})$ holds

(*c*) If $\mathsf{IsOn(Light)} \leftrightarrow \mathsf{IsRunning(Pump)}$ and $\mathbf{K}_{Chris}\mathsf{IsOn(Light)}$ hold, then $\mathbf{K}_{Chris}\mathsf{IsRunning(Pump)}$ holds

(*d*) If $\mathbf{K}_{Ada}(\mathsf{IsOn(Light)} \rightarrow \mathbf{K}_{\mathsf{Chris}}\mathsf{IsRunning(Pump)})$ and $\mathbf{K}_{Ada}\mathsf{IsOn(Light)}$ hold, then $\mathbf{K}_{Ada}\mathbf{K}_{Chris}\mathsf{IsRunning(Pump)})$ holds

[SCORING [0...100]:

- +25pts for each correct answer
- -25pts for each incorrect answer
- 0pts for each unanswered question

]

5

For each of the following facts, say if it is true or false.

(*a*) If A and B are conditionally independent given C, then $\mathbf{P}(A \mid B, C) = \mathbf{P}(A \mid C)$.

(*b*) $\mathbf{P}(A, B \mid C) = \mathbf{P}(A \mid B, C)\,\mathbf{P}(B \mid C)\,\mathbf{P}(C)$.

(*c*) If A and B are conditionally independent given C, and all the probabilities involved are strictly greater than 0, then $\dfrac{\mathbf{P}(A, C)\,\mathbf{P}(B, C)}{\mathbf{P}(A, B \mid C)} = \mathbf{P}(C)^2$.

(*d*) Without any additional assumption, $\mathbf{P}(A, B \mid C) = \mathbf{P}(B \mid A, C)\,\mathbf{P}(A \mid C)$.

[SCORING [0...100]:

- +25pts for each correct answer
- -25pts for each incorrect answer
- 0pts for each unanswered question

]

6

(a) Describe as Pseudo-Code the recursive DPLL SAT procedure.

(b) Among the following sentences about this algorithm, only one is true. Say which one.

1 It performs non-deterministic steps before deterministic ones.

2 It requires polynomial space in worst-case.

3 It is less efficient than PL-Resolution

[SCORING: [0...100], 75 pts for a correct answer to question (a), 25 pts for correct answer to question (b); no penalties for wrong answers.]

7

Consider the following tree-structured map-coloring problem, with domain $D \stackrel{\text{def}}{=} \{\text{Red}, \text{Green}, \text{Blue}\}$, with the following initial domain restrictions:

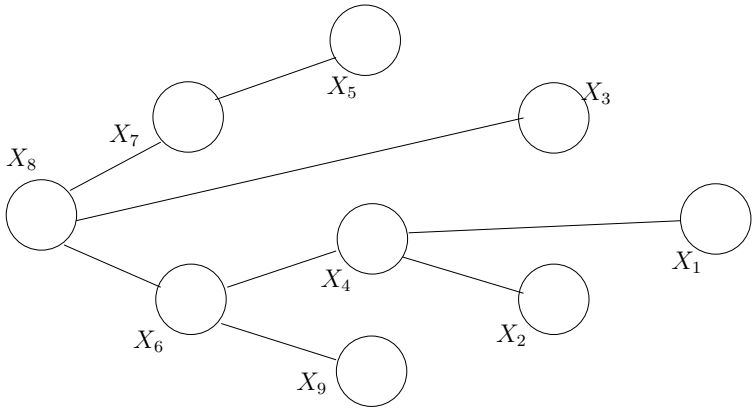

$$
\begin{array}{lllll}
X_1 = \{ & \text{Red} & , & , & \} \\
X_2 = \{ & & , \text{Green} & , & \} \\
X_3 = \{ & & , & , \text{Blue} & \} \\
X_4 = \{ & \text{Red} & , \text{Green} & , \text{Blue} & \} \\
X_5 = \{ & & , & , \text{Blue} & \} \\
X_6 = \{ & \text{Red} & , \text{Green} & , \text{Blue} & \} \\
X_7 = \{ & & , \text{Green} & , \text{Blue} & \} \\
X_8 = \{ & \text{Red} & , \text{Green} & , \text{Blue} & \} \\
X_9 = \{ & & , \text{Green} & , & \}
\end{array}
$$

Using the Tree-Structured Algorithm, and considering the following node ordering: $\{X_8, X_7, X_5, X_3, X_6, X_9, X_4, X_2, X_1\}$.
Note: solving the problem by using any other algorithm will be considered incorrect.

(a) show the ordered progression of domain restrictions induced by the algorithm.

(b) As a consequence of the above process, state if the problem is solvable or not.
If yes, show one solution. If not, explain why it is not.

(c) Let n, d be ths number of nodes and the (maximum) domain size respectively. What is the worst-case complexity of this algortithm?

Notation: to represent the current domain of a node X_i, substitute with a blank " " any value in $\{\text{Red}, \text{Green}, \text{Blue}\}$ which cannot be assigned. (Ex: in current graph: $X_5 : \{\ ,\ , \text{Blue}\}$)

[SCORING: [0...100], 50 pts for correct answer to question (a), 25pts each for correct answer to (b) and (c). No penalties for wrong answers..]

8

Consider the following Horn formula in PL:

$$
\begin{array}{llll}
(\neg H & \vee \neg I & \vee & N) \wedge \\
(\ I & \vee \neg B & \vee \neg C) & \wedge \\
(\neg B & \vee \ M & \vee \neg C) & \wedge \\
(\neg N & \vee \ D &) & \wedge \\
(\neg E & \vee \neg F & \vee & N) \wedge \\
(\neg G & \vee \neg N & \vee \neg E) & \wedge \\
(\neg B & \vee \ A & \vee \neg H) & \wedge \\
(\neg I & \vee \ B & \vee \neg A) & \wedge \\
(\ E & \vee \neg N & \vee \neg D) & \wedge \\
(\ N &) & & \wedge \\
(\neg E & \vee \neg N & \vee & F) \wedge \\
(\neg N & \vee \ H & \vee \neg M) & \wedge \\
(\ E & \vee \neg G & \vee \neg N) & \wedge \\
(\neg N & \vee \neg B & \vee & C)
\end{array}
$$

Using the simple polynomial procedure for Horn formulas,

(a) decide if the formula is satisfiable or not

(b) if satisfiable, return the satisfying total truth assignment;
if unsatisfiable, return the falsified clause.

Note: Solving the problem by using any other procedure will be considered incorrect.

[SCORING: [0...100], 75 pts for a correct answer to (a), 25 pts for correct answer to (b), no penalties for wrong answers.]

9

Let $P()$, $Q()$, $R()$, $S()$, $T()$, $U()$, $V()$, $W()$, $X()$, $Y()$, $Z()$, denote predicates, a, b, c, d, e denote constants. Consider the following set of clauses:

$$
\begin{array}{l}
W(b) \\
\neg S(b) \\
\neg T(e) \vee S(b) \\
\neg S(b) \vee P(a) \\
U(d) \vee T(e) \\
\neg U(d) \vee X(c) \\
\neg P(a) \vee S(b) \\
P(a) \vee Y(d) \\
\neg R(a) \vee S(b) \vee T(e) \\
\neg Q(c) \vee T(e) \vee \neg U(d) \\
R(a) \vee S(b) \vee V(a) \\
R(a) \vee Q(c) \vee S(b)
\end{array}
$$

Build a refutation using the Hyper-Resolution strategy.

[SCORING: [0...100], 100 pts for correct answer. 0 points if you use any resolution strategy which is not hyper-resolution. No penalties for wrong answers..]

10

Given:

- a set of basic concepts: {Person, Man, Woman, Cat, Dog, Male, Female, Doctor, Engineer}
- a set of relations: {hasChild, hasPet}

with their standard English meaning ("hasChild" refers also to animals).
Write a $\mathcal{T}$-box in $\mathcal{ALCN}$ description logic defining the following concepts.

(*a*) C_1: a man with at least 3 cats or at least 3 dogs

(*b*) C_2: a woman with at least 3 cats or dogs

(*c*) C_3: a man with no female doctor children

(*d*) C_4: a woman whose children are all engineers or doctors

[SCORING: [0...100], 25 pts for each correct answer, no penalties for wrong answers.]

11

A In the following state graph, apply *depth-first search* (graph version, with loop detection) and report for each step:

- the node extracted from the frontier;
- the nodes in the frontier after the step, listed from the oldest to the newest.

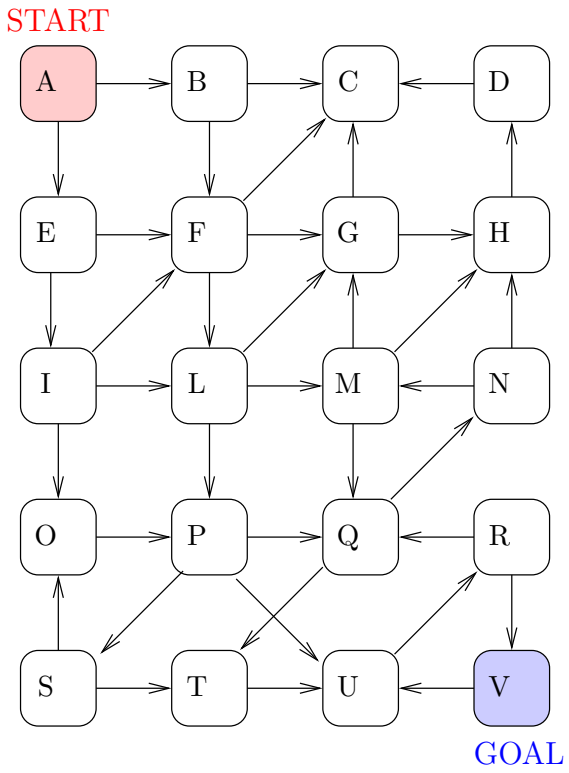

Actions are sorted according to the (ascending) alphabetical order of the destination.

[SCORING: [0...100], 100pts for a fully correct solution, -20pts for each error in the resolution process. The score cannot go below 0..]

12

(a) Describe as Pseudo-Code the specialized solving procedure for tree-structured CSPs.

(b) Say if the following sentence is true or false, and briefly explain why.

- It requires polynomial time in worst-case if the input constraint graph has no loops.

[SCORING: [0...100], 75 pts for a correct answer to question (a), 25 pts for correct answer to question (b); no penalties for wrong answers.]

13

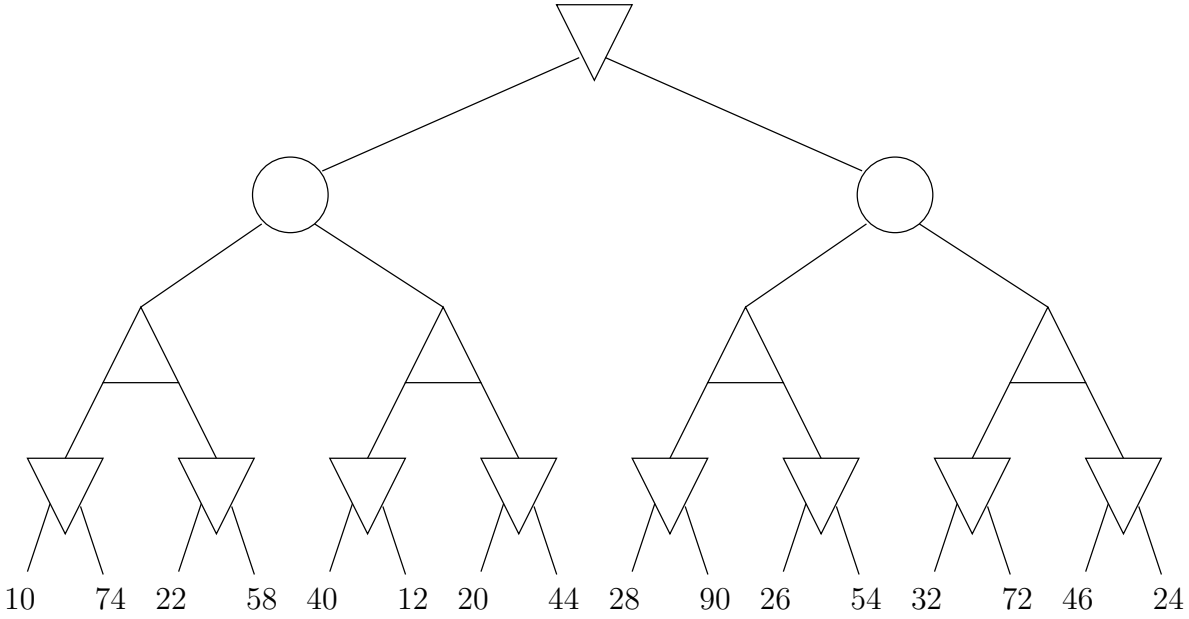

Use *ExpectiMinimax* to propagate the expected utilities from the leaves to the root of the tree. Chance nodes assign uniform probabilities to their children.

[SCORING: [0...100], 100pts for a fully correct solution, -20pts for each error in the resolution process. The score cannot go below 0..]

14

Consider the following actions with durations / dependencies:

a	duration(a)
N1	30
N2	10
N3	10
N4	10
N5	20
N6	30
N7	30
N8	20
N9	30
N10	20
N16	10
N11	20

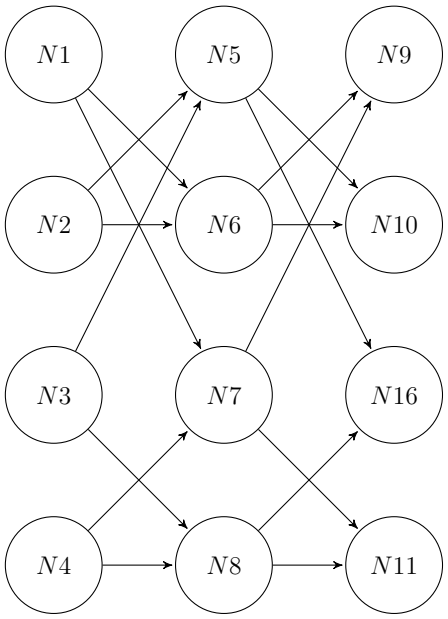

Using the Critical Path method:

- Compute the earliest / latest possible start time (ES/LS) for each action.
- Indicate all the actions that are in a critical path and the minimum makespan.

[SCORING: [0...100], 100pts for a fully correct solution, -20pts for each error in the resolution process. The score cannot go below 0..]

15

The Happyness Corporation wants to find sad people and help them. They know from historical data that 18% of the people are sad. To identify who is sad, they rely on three indicators:

Indicator #1: the person is married;
Indicator #2: the person is rich;
Indicator #3: the person has a cat.

The Corporation models the three indicators as a Naive Bayes model, i.e. it assumes they are conditionally independent given whether the person is sad or not, and from past data it has learned the following statistics: [1]

$p(\text{indicator \#1} \mid \quad sad)$	$= 0.60$
$p(\text{indicator \#1} \mid \neg sad)$	$= 0.70$
$p(\text{indicator \#2} \mid \quad sad)$	$= 0.10$
$p(\text{indicator \#2} \mid \neg sad)$	$= 0.70$
$p(\text{indicator \#3} \mid \quad sad)$	$= 0.10$
$p(\text{indicator \#3} \mid \neg sad)$	$= 0.80$

Consider a person who has a cat, but is **not** married and is **not** rich. Compute the probability that this person is sad.

[SCORING: [0...100], 100pts for a fully correct solution, -10pts for each error in the resolution process. The score cannot go below 0.]

[1] The data here are pure fantasy and have no correspondence with any real-world study.