Nomadic Communications
802.11e:
Improved Efficiency
and Service Differentiation

Renato Lo Cigno

ANS Group – locigno@disi.unitn.it

http://disi.unitn.it/locigno/index.php/teaching-duties/nomadic-communications

Copyright

Quest'opera è protetta dalla licenza:

Creative Commons
Attribuzione-Non commerciale-Non opere derivate
2.5 Italia License

Per i dettagli, consultare
http://creativecommons.org/licenses/by-nc-nd/2.5/it/

Quality-of-Service Provisioning Terminology

- Definition: A **flow** is a packet stream from a source to a destination, belonging to the same application
- Definition: **QoS** is a set of service requirements to be met by the network while transporting a flow
- Typical QoS metrics include: available bandwidth, packet loss rate, estimated delay, packet jitter, hop count and path reliability
- A flow is easily identified with the 5-tuple
  {IPs,IPd,Transport,PORTs,PORTd}

UNIVERSITY OF TRENTO
Department of Information Engineering and Computer Science

- QoS schemes in wired networks are NOT suitable for wireless networks
  - e.g., current wired-QoS routing algorithms require accurate link state and topology information
  - time-varying capacity of wireless links, limited resources and node mobility make maintaining accurate information difficult
- Supporting QoS in wireless networks is very challenging

Improving MAC: IEEE 802.11e

- The IEEE 802.11 TG E was formed in 1999
- The Project Authorization Request (PAR) was approved in March 2000
- **Scopes of the IEEE 802.11 Task Group E**
  - Enhance the current 802.11 MAC to improve and manage QoS
  - Consider efficiency enhancements in the areas of DCF and PCF
  - Provide different classes of service (4 TCs)

802.11e Standard

- Released 2007 (effective 2009/10, widespread 2012 on)
- PHY unchanged (use a/b/g)
- MAC Enhanced: Goals
  - Increase MAC efficiency
  - Traffic Differentiation and Guarantee
  - TSPEC and CAC
  - Interoperation with legacy 802.11
- It's also used in 802.11n/ac/ad PHY

802.11e: QSTA, QAP, QBSS, HCF

- A station using 802.11e is called *QoS Enhanced Station* (QSTA)
- An AP using 802.11e is called *QoS Access Point* (QAP)
- QSTA e QAP works within a *QoS Basic Service Set* (QBSS)
- The two coordination functions DCF e PCF are substituted by a single *Hybrid Coordination Function (HCF)*

- Hybrid Coordination Function, alternates:
  - EDCA (Enhanced Distributed Channel Access), contention based, conceived to support legacy stations and provide some *stochastic* level of differentiation
  - HCCA (HCF Coordinated Channel Access), polling based, provides collision free periods with guaranteed assignment and *deterministic* differentiation
  - HCCA duration can be zero

802.11e proposes a new access scheme: Hybrid Coordination Function (HCF), composed of two coordination functions

- Enhanced Distributed Channel Access (EDCA)
  - A basis layer of 802.11e; always "running" operates in Contention Periods (CP)
- HCF Controlled Channel Access (HCCA)
  - HCCA operates in CFP and it is superimposed on EDCA and can interrupt CPs

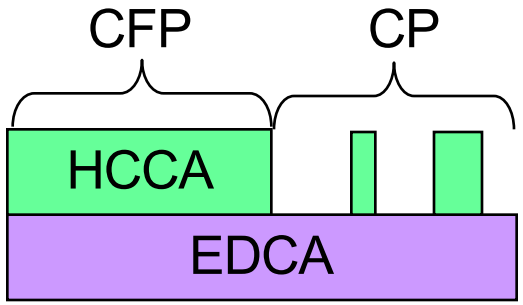

- TXOP: Transmission Opportunity
  - Time interval during which a QSTA has the right to transmit
  - A channel contention/access is done for ta TXOP and not for a single frame
  - It is characterized by a starting time and a maximum duration (TXOP_Limit)
  - Used in both CP and CFP

UNIVERSITY OF TRENTO
Department of Information Engineering and Computer Science

- MAC-level FEC (Hybrid I and II)
- **Ad hoc features:**
  - Direct Communication / Side Traffic
  - WARP: Wireless Address Resolution Protocol
  - AP mobility

802.11e: Hybrid Coordinator

- Within a QBSS a centralized controller is needed to coordinated all QSTAs. This is the *Hybrid Coordinator* (HC), normally implemented within a QAP
- An HC has the role of splitting the transmission superframe in two phases continuously alternating:
  - *Contention Period* (CP), where QSTAs content for the channel using EDCA
  - *Contention-Free Period* (CFP), where HC defines who is going to use the channel and for what time with a collision free polling protocol

MAC 802.11e: HC

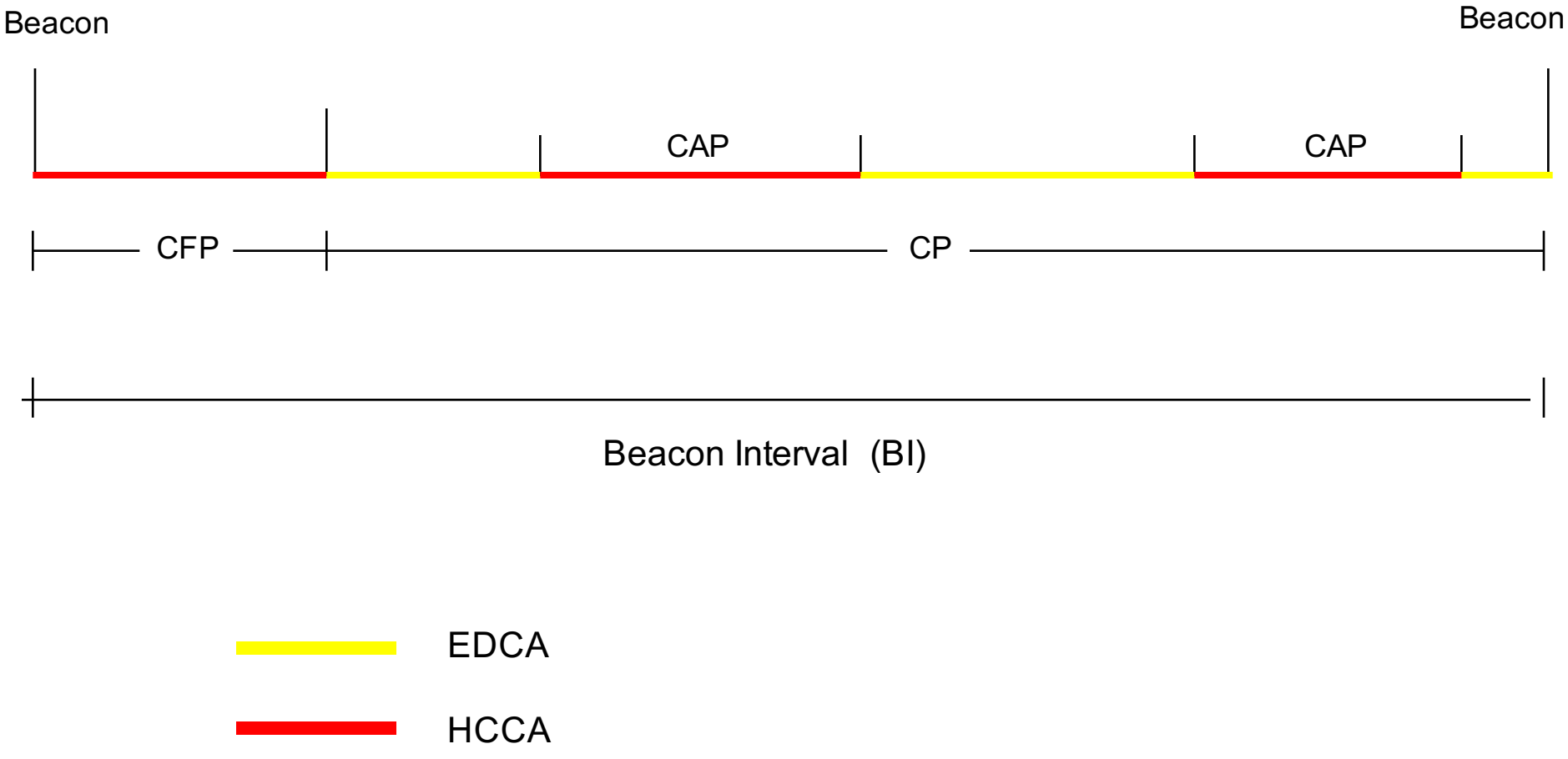

802.11e: EDCF

- The *Enhanced Distributed Coordination Function* (EDCF) define a differentiated access scheme based on an improved (yet complex) contention scheme
- It is an evolution of CSMA/CA DCF, with the add-on of traffic classes to support QoS and differentiate traffic
- EDCF is designed to support frames with the same 8 priority levels of 802.1d, but mapping them on only 4 access categories
- Every frame passed to the MAC layer from above, must have a priority identifier (from 0 to 7), called *Traffic Category Identification* (TCId)

- TCId is written in one header field of the MAC frame
- Each 802.11e QSTA & QAP MUST have four separated AC queues

- **Each AC queue is FIFO and behaves independently from the others as far as the CSMA/CA MAC protocol is concerned**

802.11e: EDCF

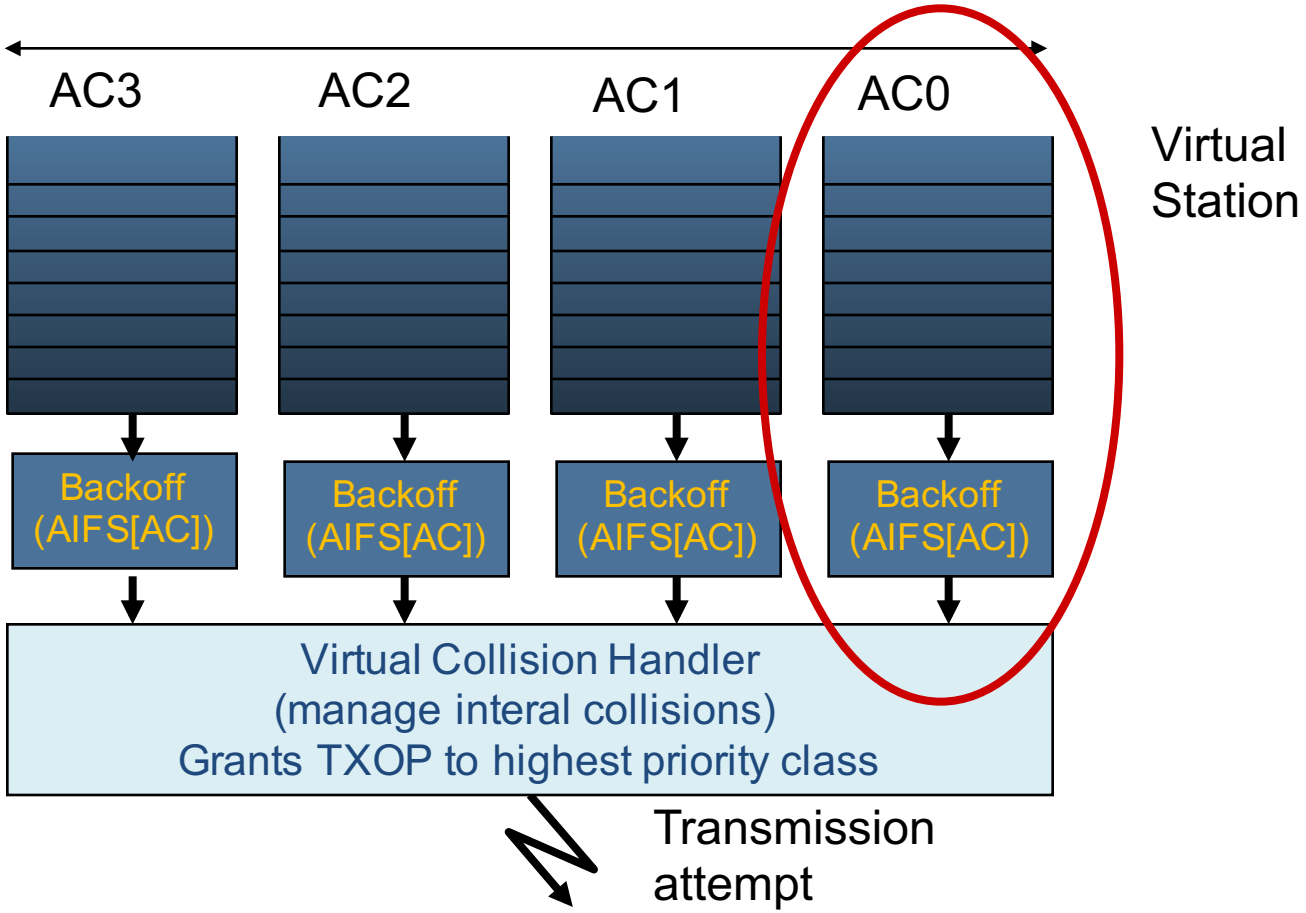
AC3
AC2
AC1
AC0
Virtual Station
Backoff (AIFS[AC])
Backoff (AIFS[AC])
Backoff (AIFS[AC])
Backoff (AIFS[AC])
Virtual Collision Handler
(manage interal collisions)
Grants TXOP to highest priority class
Transmission attempt

- ACs are differentiated based on their CSMA parameters:
  - **IFS**
  - **CWmin**
  - **CWmax**
  - **Backoff exponent**

802.11e: EDCF

- Higher priority ACs are assigned parameters that result in shorter CWs so that a statistical advantage is gained in accessing the channel
- Protocol parameters become vectors
  - CWmin[AC]
  - CWmax[AC]
  - AIFS[AC]
  - bck[AC]

- CW[AC,t] is derived with the usual CSMA/CA rules

- Arbitration InterFrame Space (AIFS) substitute the common DIFS
- Each AIFS is at least DIFS long

- Befor entering the backoff procedure each *Virtual Station* will have to wait AIFS[AC], instead of DIFS

Arbitraration IFS (AIFS)

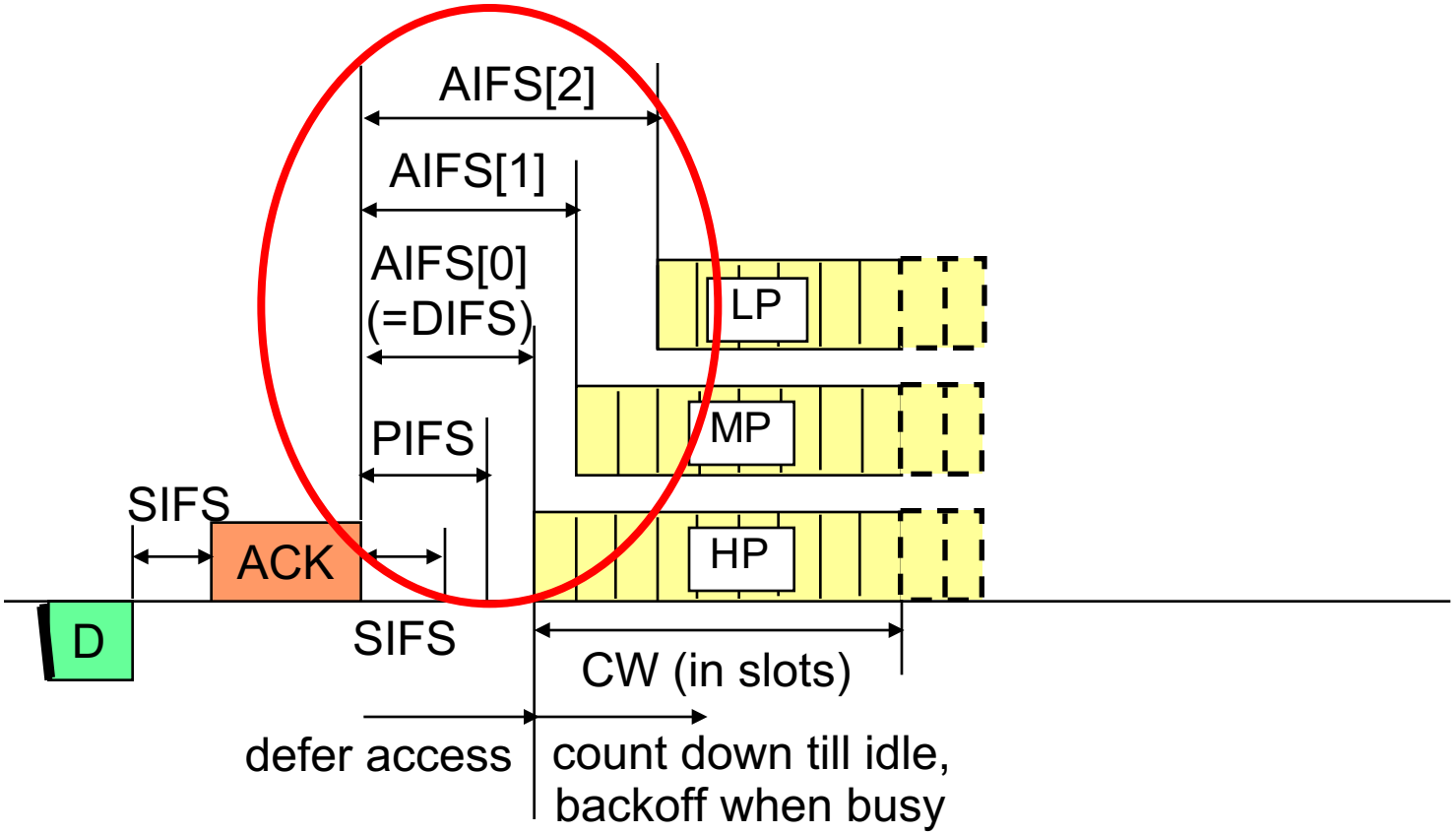

802.11a: slot=9 μs, SIFS=6 μs, PIFS=15 μs, DIFS=24 μs, AIFS ≥34 μs

- $CW_{min}[AC]$ and $CW_{max}[AC]$
- Contention Window update:

$$CW_{new}[AC] = (CW_{old}[AC] + 1) \cdot bck - 1$$

Backoff

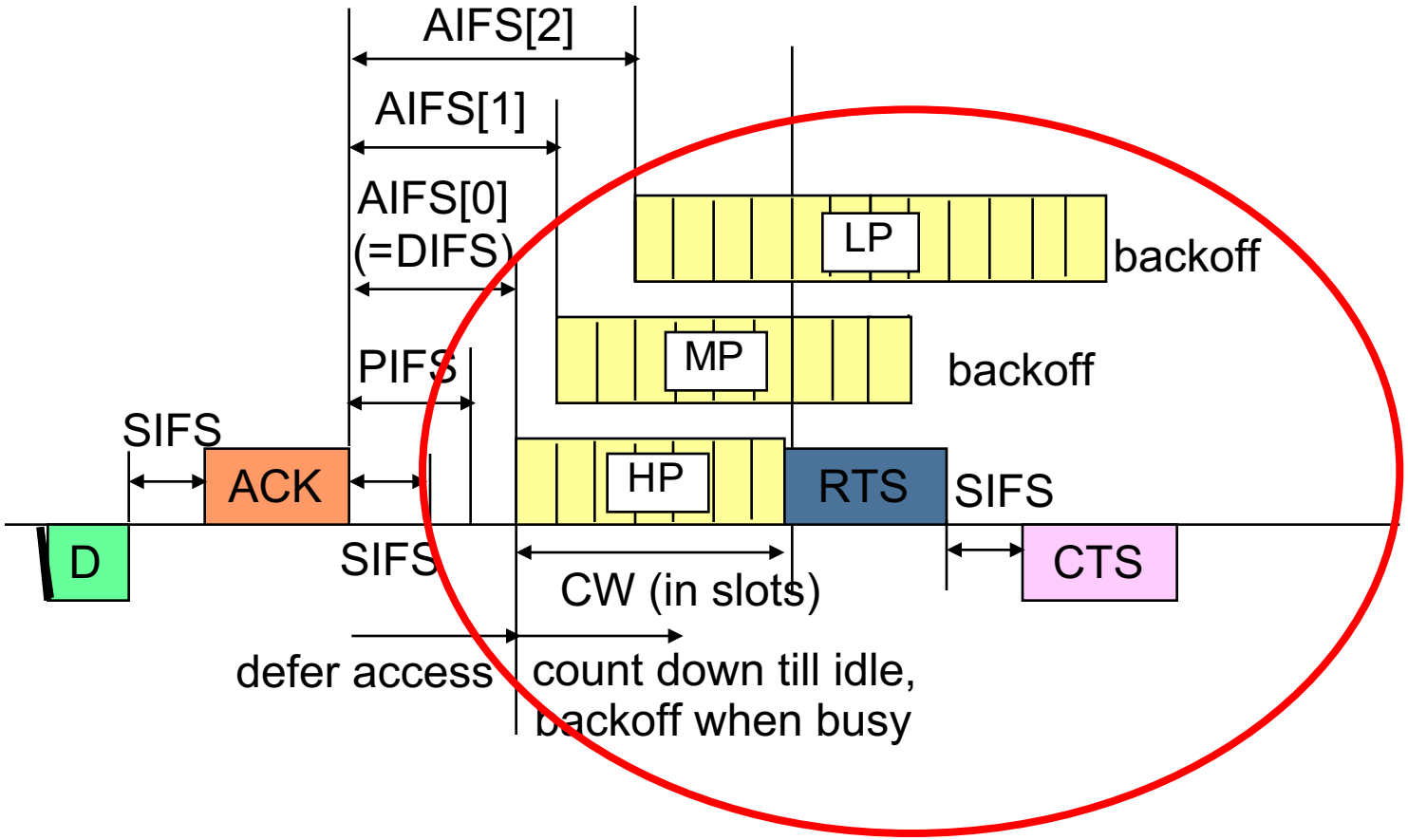

802.11a: slot=9 μs, SIFS=16 μs, PIFS=25 μs, DIFS=34 μs, AIFS ≥34 μs

Virtual Stations

- Each AC queue behaves like a different virtual station (independent sensing and backoff)
- If the backoff counters of two or more parallel ACs in the same QSTA reach 0 at the same time, a scheduler inside the QSTA avoids l collision by granting the TXOP to the AC with the highest UP
- **The lowest priority colliding behaves as if there were an external collision**

- Values of AIFS[AC], CWmin[AC] e CWmax[AC] are determined by the QAP and transmitted within beacon frames (normally every 100 ms)
- QSTAs must abide to the received parameters
- QSTAs may use these parameters to chose the QAP the prefer to connect to (estimate of the expected performance)

802.11e: TXOP

- TXOP is the time interval in which a STA may use the channel
- It's an initial time plus a duration, indeed the contention is no more for a PDU, but can be for many aggregated PDUs

- CW[AC] is managed with usual rules of increment (after collisions/failures) and decrement (during idle cahnnel):

  NewCW[AC] = ((OldCW[AC] + 1) * 2) - 1

Sample allocation of TCId to ACs:

TCID	CA	Traffic description
0	0	Best Effort
1	0	Best Effort
2	0	Best Effort
3	1	Video Probe
4	2	Video
5	2	Video
6	3	Voice
7	3	Voice

EDCA Bursting

- Once the station has gained access to the medium, it can be allowed to send more than one frame without contending again
- The station cannot transmit longer than TXOP_Limit
- ACK frame by frame or Burst ACK
- SIFS is used between frames within the same TXOP to maintain the channel control when assigned

UNIVERSITY OF TRENTO
Department of Information Engineering and Computer Science

- **Pros**
  - Reduces network overhead
  - Increases throughput (SIFS and burst ACKs)
  - Better fairness among the same priority queues: independently of the frame size, a QSTA gets a TXOP every time it wins a contention
    - E.g., STA A uses 500 B frame; STA B uses 1K B frame. Thus B would get higher throughput in 802.11, while in 802.11e both can get approximately same throughput

- **Cons**
  - Possible increasing of delay jitter
  - TXOP_Limit must be longer than the time required for transmitting the largest data frame at the minimum speed
- In any case EDCA does not solve the downlink/uplink unfairness problem

802.11e: HCF

- HC may allocate TXOPs to himself (QAP) or to other QSTAs
- Self allocation is done to transmit MSDUs, allocation of resources may solve the uplink/downlink unfairness
- Allocation to AP can be done after a Point coordination InterFrame Space (PIFS) con PIFS < DIFS
- HC (QAP) has priority over other stations and may interrupt a CP to start a CFP transmitting a Poll frame

802.11e: HCF

- Time is divided between contention free periods (CFP) and contention periods (CP), that are alternated roughly cyclically

- A sequence CFP + CP defines a Periodic Superfame of 802.11e

- The CP can be interrupted by other contention free periods called CAPs

802.11e: HCF

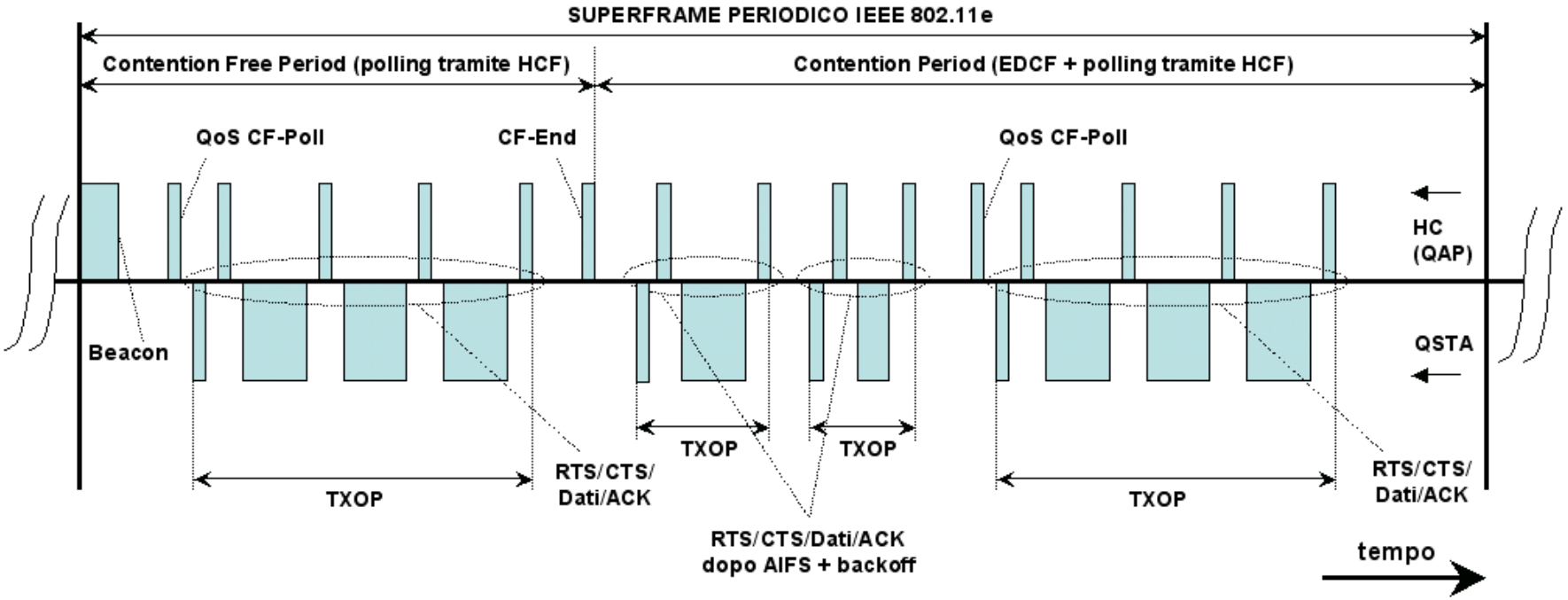
SUPERFRAME PERIODICO IEEE 802.11e
Contention Free Period (polling tramite HCF)
Contention Period (EDCF + polling tramite HCF)
QoS CF-Poll
CF-End
QoS CF-Poll
HC
(QAP)
QSTA
Beacon
TXOP
RTS/CTS/
Dati/ACK
TXOP
TXOP
TXOP
RTS/CTS/
Dati/ACK
RTS/CTS/Dati/ACK
dopo AIFS + backoff
tempo

MAC 802.11e: HCCA

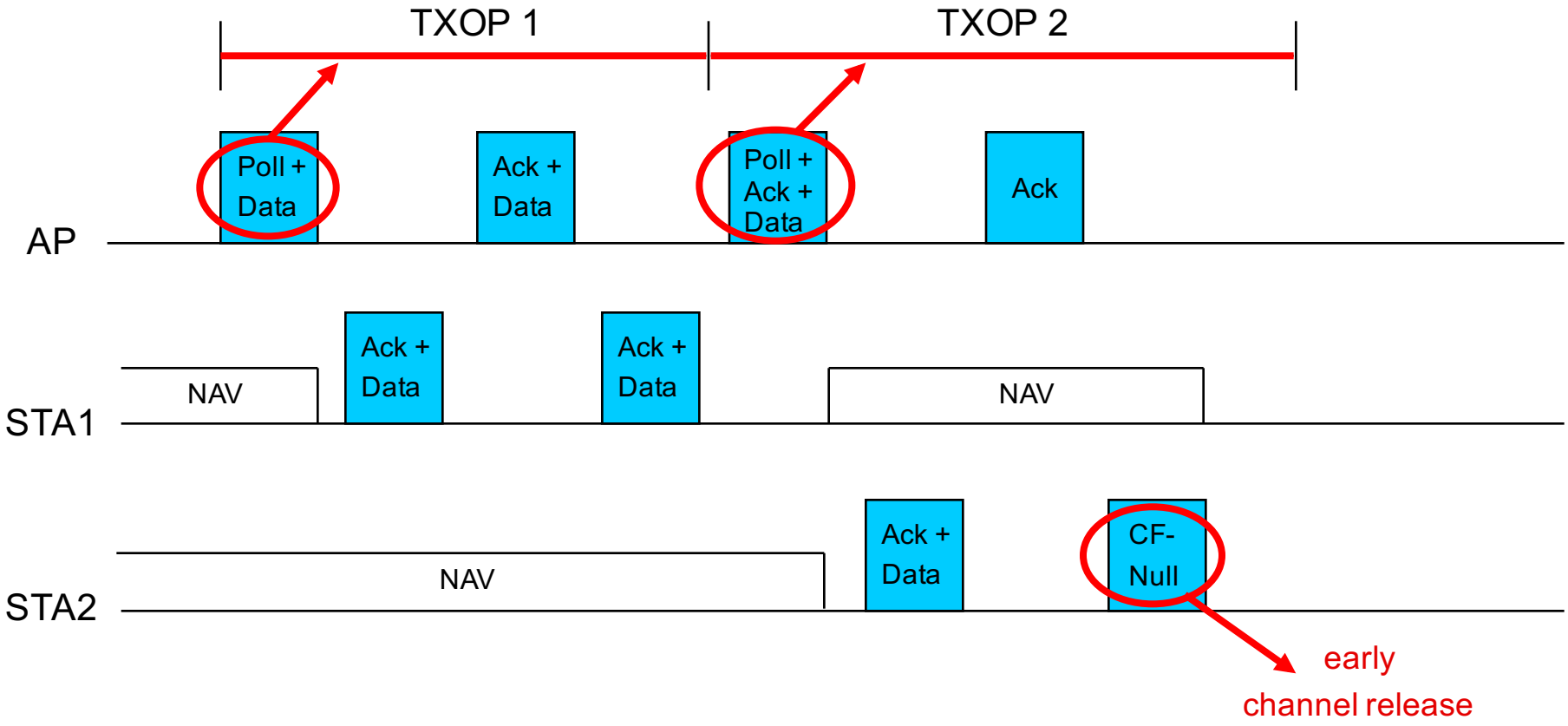

802.11e: HCF – QoS CFPoll Frame

- Within a CP, TXOP is determined either:
  - Through EDCF rules (free channel + AIFS + BO + TXtime)
  - Through a poll frame, called QoS CFPoll, sent by HC to a station
- QoS CFPoll is sent after PIFS, so with priority wrt any other traffic
- Indeed there is not a big difference between a CFP and CAPs
- During CFP, TXOPs are again determined by HC and QoS CFPoll can be piggybacked with data and ACKs if needed
- Stations not polled set NAV and cannot access the channel

- The CFP must terminate within a time specified in beacons and it is terminated by the CF-End frame sent by HC
- QoS CF-Poll frame was introduced with the 802.11e amendment, for backward compatibility it contains a NAV field the legacy stations can use to avoid interfering
- NAV specify the whole TXOP duration
- Legacy stations in HCF can only use the CP period

HCCA

- HCCA effectively provides policing and deterministic channel access by controlling the channel through the HC
- It is backward compatible with basic DCF/PCF
- Based on polling of QSTAs by the HC

Crucial features of HCCA

- HCCA operates in CP and CFP
- Uses TXOPs which are granted through HC
  - HC allocates TXOPs by using QoS CF-Poll frames
  - In CPs, the time interval during which TXOPs are polled by HC is called CAP (Controlled Access Period)
  - 4 Traffic Categories (TCs)

- According to HCCA:
  - HC may allocate TXOPs to itself to transmit MSDUs whenever it wants, however only after having sensed the channel idle for PIFS
  - In CP, the HC can send the CF-Poll frame after a PIFS idle period, thus starting a CAP
  - In CFP, only the HC can grant TXOPs to QSTAs by sending the CF-Poll frame
  - The CFP ends after the time announced by HC in the beacon frame or by the CF-End frame from HC

- A QSTA behaves as follows
  - In CP QSTAs can gain a TXOP thanks to a CF-Poll frame issued by HC during CAPs, otherwise they can use EDCA
  - In CFP, QSTAs do not attempt accessing the channel on their own but wait for a CF-Poll frame from the HC
- The HC indicates the TXOP duration to be used in the CF-Poll frame (QoS-control field)
  - Legacy stations kept silent by NAV whenever they detect a CF-Poll frame

802.11e Superframe

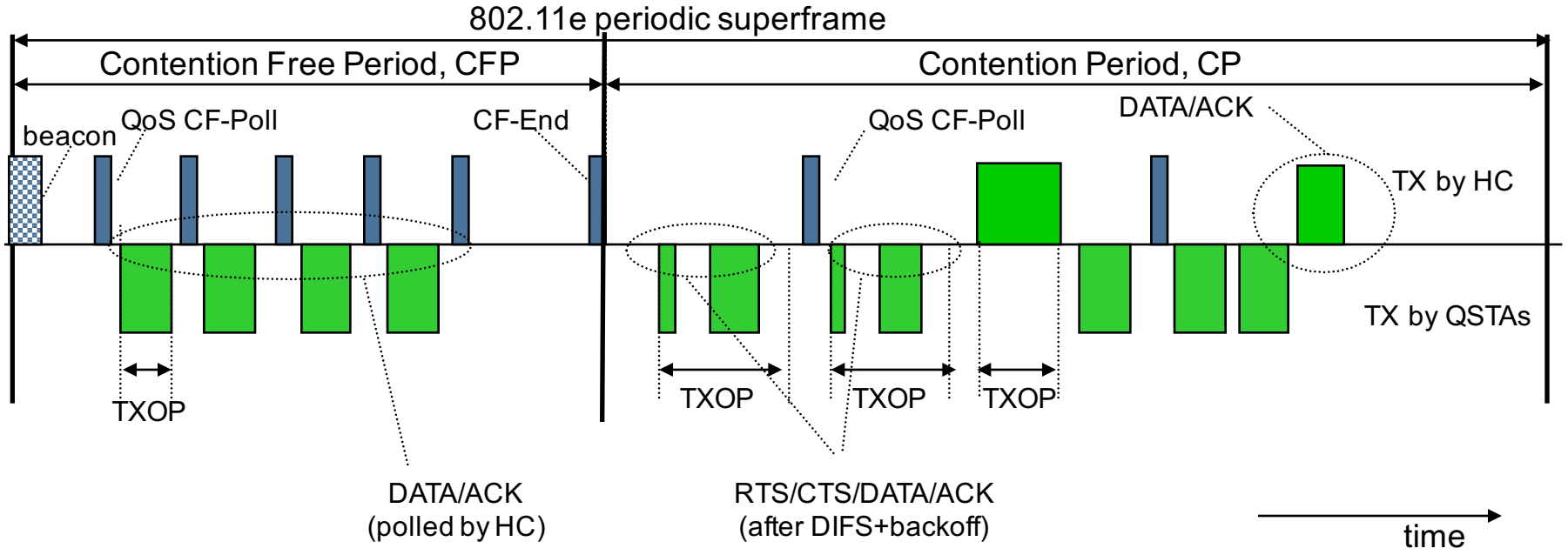

During the CP, a TXOP may begin because:

- The medium is determined to be available under EDCA rules (EDCA-TXOP)
- The STA receives a special polling frame from HC (polled-TXOP)

- Polling list is a crucial key in HCCA
  - Traffic scheduling (i.e., how QSTAs are polled) is not specified
  - QSTAs can send updates to the HC on their queue size as well as on the desired TXOP, (through the QoS control field in data frames)
  - QSTAs can send ADDTS requests to initiate a new traffic stream

- Two types of signaling traffic are supported:
  - Connectionless queue state indicator
    - E.g., Arrival rate measurement: notification and not negotiation between peer entities is used
  - TSPEC (Traffic Specification) between HC and QSTAs
    - E.g., service negotiation and resource reservation

Traffic Signaling

- TSPEC are the base for CAC
- QoS without CAC is impossible
- QoS is granted to flows not to packets
- Flows are persistent (normally)
- Flows can be predicted (sometimes)

- Not essential to backward compatibility
  - The standard has just a reference impl. (SS)
- HCF is implemented in the AP
  - HCCA scheduling is a function of HCF
- Requirements of traffic flows are contained in the *Traffic Specifications* (TSPEC):
  - Maximum, minimum and mean datarate
  - Maximum and nominal size of the MSDUs
  - Maximum Service Interval and ***Delay Bound***
  - Inactivity Interval
  - …